Sensor principle		MH-C	MH-C2
Electrical data			
Measuring range	°	0 ... 360	0 ... 360
Indep. linearitiy (without misalignment)	% of meas. range	±0.3	±0.3
Indep. linearitiy (with allowed misalignment @ 360°)	% of meas. range	±0.5	±0.5
Max. hysteresis	°	0.1	0.1
Resolution	bit	12	14
Max. repeatability	°	0.1	0.1
Sample rate fast mode	kHz	(5)	(2)
Sample rate slow mode	kHz	1.66	0.5
System propagation delay fast mode	µs	(800)	(800)
System propagation delay slow mode	µs	4600	2500
Max. temperature coefficient of the output signal	ppm/K	50	50
MTTFd / MTBF	years	668 / 668	308 / 308
Power supply voltage	VDC	5 (±10%)	5 (±10%)
Current consumption without load (typ.) fast mode	mA	(14)	(15)
Current consumption without load (typ.) slow mode	mA	9	10
Min. ohmic load at output	kOhm	10	10
Max. capacitive load at output	nF	100	100
Reverse polarity protection of power supply		yes	no
Electrical connection axial		Wires (3x)	Wires (3x)
Cross section of single wires	mm^2	0.56 (AWG20)	0.56 (AWG20)
Electrical connection radial		Cable 3pole	Cable 3pole
Cross section of single wires	mm^2	0.56 (AWG20)	0.56 (AWG20)
Redundancy feasible		yes	yes
Electrical connection redundant axial		Wires (6x)	Wires (6x)
Cross section of single wires redundant	mm^2	0.56 (AWG20)	0.56 (AWG20)
Electrical connection redundant radial		Cable 6pole	Cable 6pole
Cross section of single wires redundant	mm^2	0.25 (AWG24)	0.25 (AWG24)
Mechanical data			
Mechanical range	°	360 (continuous)	360 (continuous)
Protection class		IP68	IP68
Min. life	movements	no limitation	no limitation
Operating & storage temperature (with wires)	°C	-40 ... +125	-40 ... +85
Operating & storage temperature (with round cable)	°C	-40 ... +85	-40 ... +85
EN 60068-2-6 Vibration (Amax = 0.75mm, f = 5…2000 Hz)	g	50	50
EN 60068-2-27 Shock	g	200	200
Standards			
EN 55022 class B, Emission radiated (30...230 MHz)	dB(µV/m)	max. 30	max. 30
EN 55022 class B, Emission radiated (230...1000MHz)	dB(µV/m)	max. 37	max. 37
EN 61000-4-2, ESD (contact discharge / air discharge)	kV	±4 / ±8	±4 / ±8
EN 61000-4-3, Immission HF radiated (80...1000 MHz/4...2.7GHz)	V/m	30	30
EN 61000-4-4, Burst (on all lines)	kV	±1	±1
EN 61000-4-5, Surge (lines to ground)	kV	±1	±1
EN 61000-4-6, Immission HF conducted (0.15...80MHz)	Vemk	10	10
EN 61000-4-8, Immission magnetic field (50Hz)	A/m	300	300
EN 60393-1 Insulation resistance (500VDC, 1bar, 2s)	GOhm	20	20
EN 60393-1 Dielectric strength (VAC, 50Hz, 1min, 1bar)	kV	1	1

Vert-X 37E - 5V / 10...90% Ub

Applications
- Agricultural machines
- Construction machines
- Forest machines
- Special purpose vehicles

Features general
- High protection class IP68
- Very robust design
- Non-contacting measuring method
- Very long life
- High accuracy of measurement
- Applications under adverse ambient conditions possible (humidity, dampness, dust, vibrations etc.)
- Full resolution and accuracy at programmed electrical angle

Features MH-C
- Resolution of 12bit
- Lower price than MH-C2

Features MH-C2
- Resolution of 14bit
- Index point(s), sense of rotation and angle settable resp. programmable by customer (optional)

Errors and omissions excepted. Subject to change without notice. / State: 27.02.19

Contelec AG
Portstrasse 38
CH-2503 Biel/Bienne
Phone +41 (0)32 3665600
Telefax +41 (0)32 3665604
sales@contelec.ch

CONTELEC
A company of the Siedle-Group

Vert-X 37E - 5V / 10...90% Ub
Ordering code

*** Switch outputs**
Please define number (max. 127), position and width of the pulses.

Output characteristics

Positive gradient CW	Standard	1
Positive gradient CCW	Optional	2
Redundant, positive gradient CW	Optional	3
Redundant, positive gradient CCW	Optional	4
Redundant, crossed signal curves	Optional	5
Positive gradient CW with 1 switch output*	Optional	A
Positive gradient CCW with 1 switch output*	Optional	B
Positive gradient CW with 2 switch outputs*	Optional	C
Positive gradient CCW with 2 switch outputs*	Optional	D
Sense of rotation settable	Optional	E
Zero point & sense of rotation settable	Optional	F
Middle point & sense of rotation settable	Optional	G
Start + end point & sense of rotation settable	Optional	H
Programmable with Vert-X EasyAdapt	Optional	P

Output signal

10% ... 90% Ub	Standard	2
x% ... y% Ub (within 5 ... 95%)	Optional	3

Power supply voltage

5VDC	Standard	2

Electrical connection / axial

3	Optional	Wires 4pole
5	Standard	Wires 3pole
7	Optional	Wires 5pole / 6pole
9	Optional	Special cable ; special wires

Electrical connection / radial

4	Standard	Round cable 3pole
6	Optional	Round cable 6pole
9	Optional	Special cable ; special wires

Length of wires

01	Optional	10cm
03	Optional	30cm
05	Standard	50cm
99	Optional	Special length

Length of cable

02	Standard	1.0m
06	Optional	3.0m
10	Optional	5.0m
99	Optional	Special length

Vert-X	3	7	E	4		7	3	6		2	2	1		5	0	5

Electrical angle

36	Standard	Electrical angle 360°
xx	Optional	03 to 35; Declaration in 10° steps
99	Optional	Special angle

Sensor principle

7	MH-C
8	MH-C2

Mechanical version

37E1	Optional	Servo mount size 13 ; magnetic actuator type 1
37E2	Optional	Servo mount size 13 ; magnetic actuator type 2
37E4	Standard	Servo mount size 13 ; magnetic actuator type 4
37E9	Optional	Special housing ; special magnetic actuator

Options (on request)

	MH-C	MH-C2
Custom magnetic actuator	X	X
Custom modification of the housing	X	X
Custom cable / wires	X	X
Interface x% ... y% Ub (within 5% ... 95% Ub)	X	X
Sample rate in fast mode	X	X
Switch functions TTL (max. 2)	X	X
Special characteristic curve	-	X
Special electrical angle within 30° to 360° (ex factory)	X	X
Electrical angle programmable (Software)	-	X
Start & end point settable (Additional wires)	-	X
Sense of rotation CW/CCW settable / programmable (Additional wires or Software)	-	X
Index point settable / programmable (Additional wires or Software)	-	X

Errors and omissions excepted. Subject to change without notice. / State: 27.02.19

Contelec AG
Portstrasse 38
CH-2503 Biel/Bienne
Phone +41 (0)32 3665600
Telefax +41 (0)32 3665604
sales@contelec.ch

CONTELEC
A company of the Siedle-Group

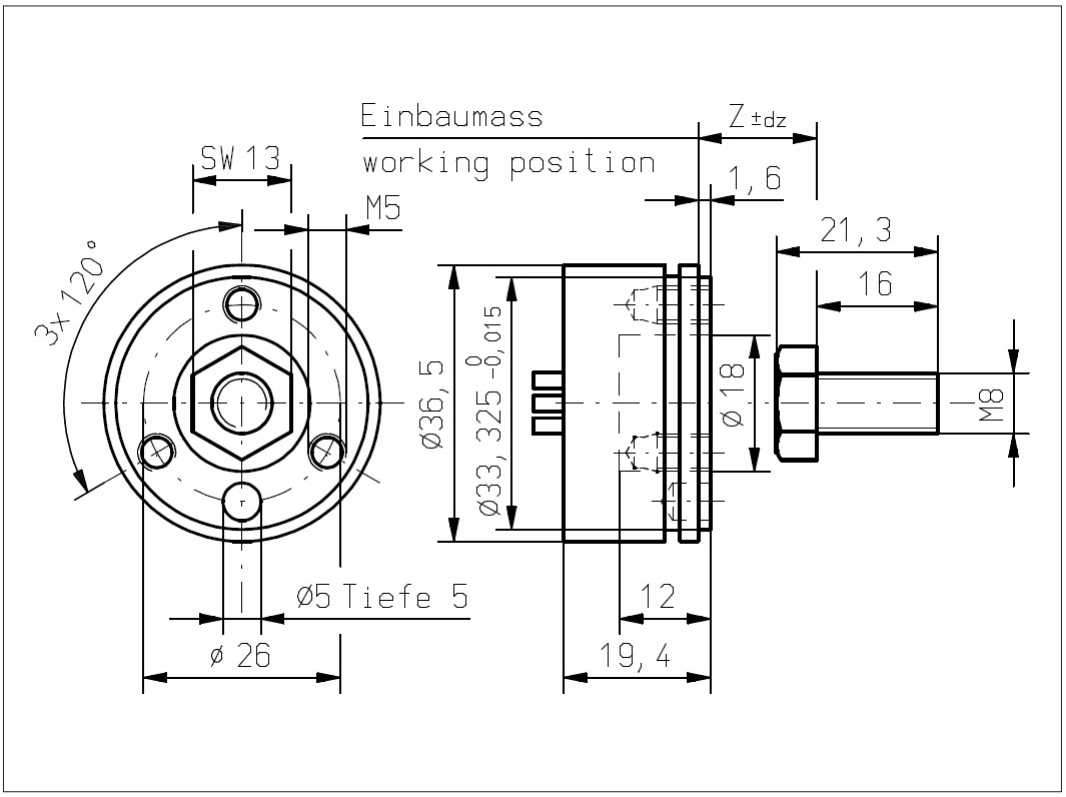

Vert-X 37E4 xxx xxx 5xx
Vert-X 37E4 xxx xxx 7xx

Accessories (incl.)
- 1x Fixation clip
- 2x Slotted cylinder head screw M5x12

Working position (Z) and max. permitted misalignment of the magnetic actuator
see mounting information

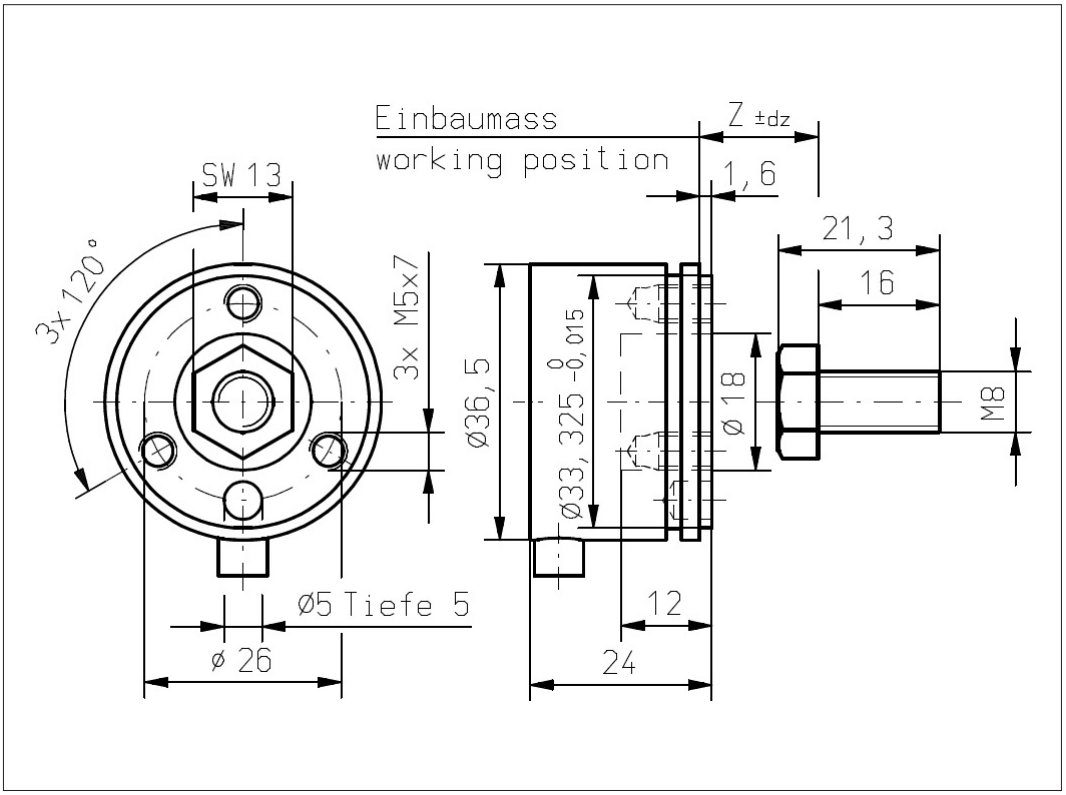

Vert-X 37E4 xxx xxx 4xx
Vert-X 37E4 xxx xxx 6xx

Accessories (incl.)
- 1x Fixation clip
- 2x Slotted cylinder head screw M5x12

Working position (Z) and max. permitted misalignment of the magnetic actuator
see mounting information

Errors and omissions excepted. Subject to change without notice. / State: 27.02.19

Contelec AG
Portstrasse 38
CH-2503 Biel/Bienne
Phone +41 (0)32 3665600
Telefax +41 (0)32 3665604
sales@contelec.ch

CONTELEC
A company of the Siedle-Group

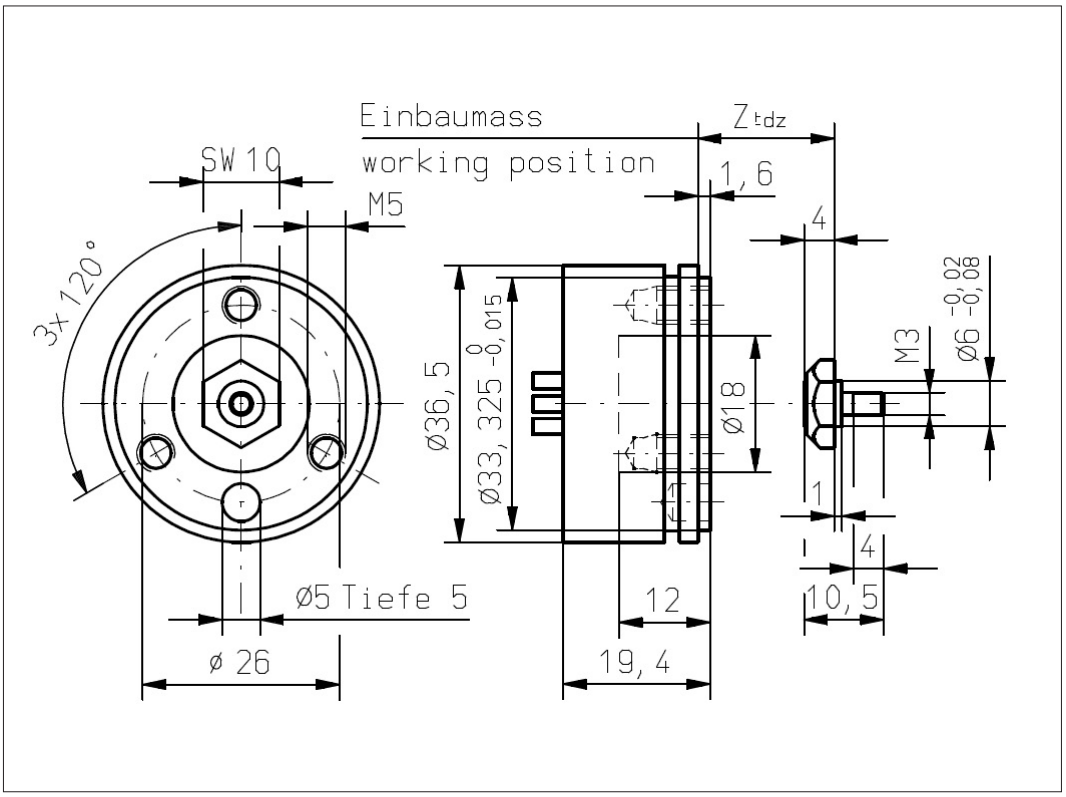

Vert-X 37E1 xxx xxx 5xx
Vert-X 37E1 xxx xxx 7xx

Accessories (incl.)
- 1x Fixation clip
- 2x Slotted cylinder head screw M5x12

Working position (Z) and max. permitted misalignment of the magnetic actuator
see mounting information

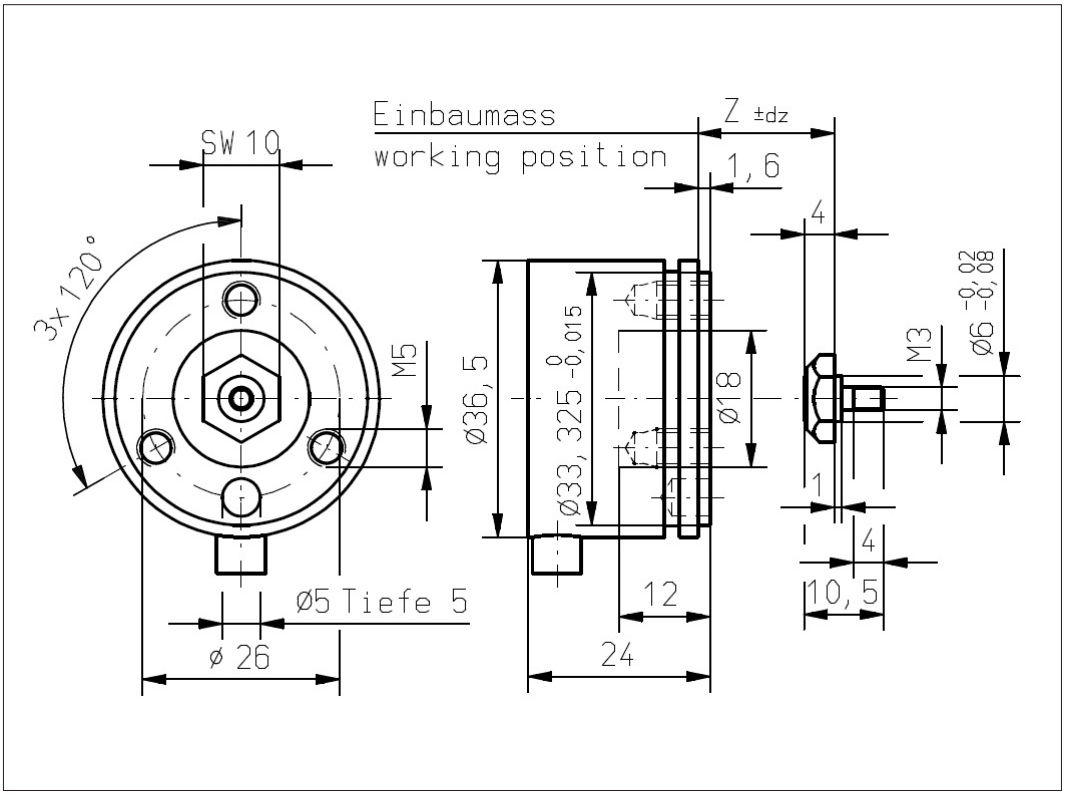

Vert-X 37E1 xxx xxx 4xx
Vert-X 37E1 xxx xxx 6xx

Accessories (incl.)
- 1x Fixation clip
- 2x Slotted cylinder head screw M5x12

Working position (Z) and max. permitted misalignment of the magnetic actuator
see mounting information

Errors and omissions excepted. Subject to change without notice. / State: 27.02.19

Contelec AG
Portstrasse 38
CH-2503 Biel/Bienne
Phone +41 (0)32 3665600
Telefax +41 (0)32 3665604
sales@contelec.ch

CONTELEC
A company of the Siedle-Group

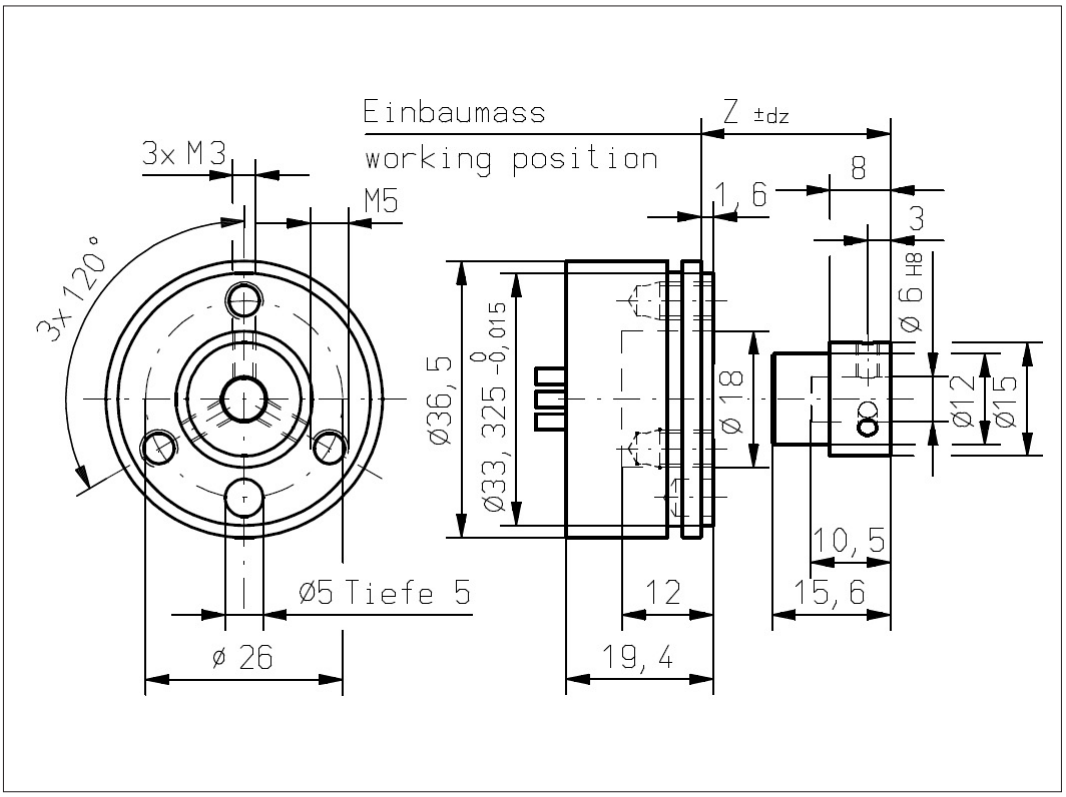

Vert-X 37E2 xxx xxx 5xx
Vert-X 37E2 xxx xxx 7xx

Accessories (incl.)
- 1x Fixation clip
- 2x Slotted cylinder head screw M5x12

Working position (Z) and max. permitted misalignment of the magnetic actuator
see mounting information

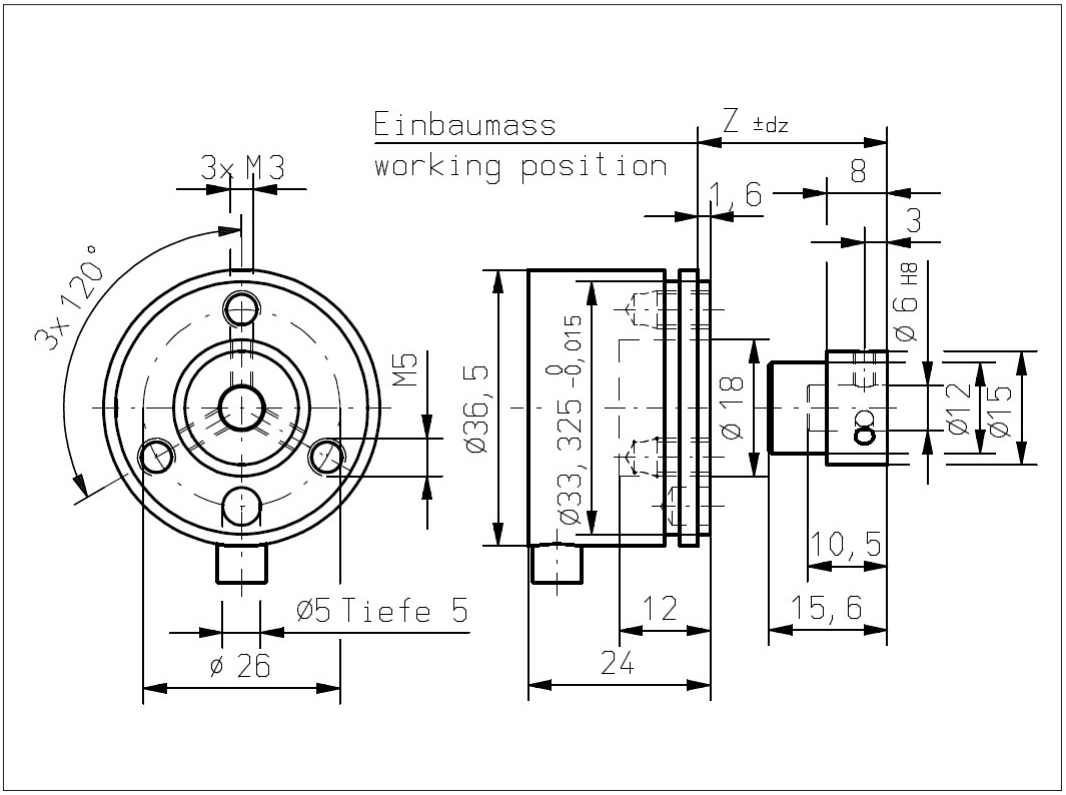

Vert-X 37E2 xxx xxx 4xx
Vert-X 37E2 xxx xxx 6xx

Accessories (incl.)
- 1x Fixation clip
- 2x Slotted cylinder head screw M5x12

Working position (Z) and max. permitted misalignment of the magnetic actuator
see mounting information

Errors and omissions excepted. Subject to change without notice. / State: 27.02.19

Contelec AG
Portstrasse 38
CH-2503 Biel/Bienne
Phone +41 (0)32 3665600
Telefax +41 (0)32 3665604
sales@contelec.ch

CONTELEC
A company of the Siedle-Group

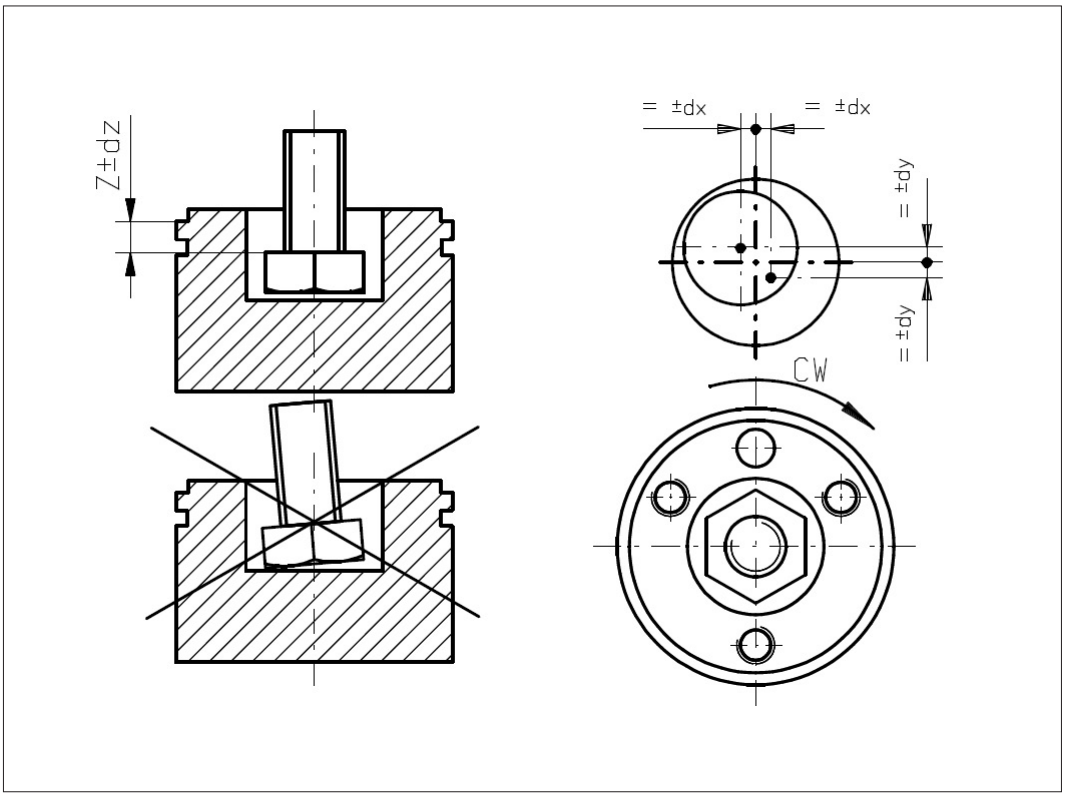

Vert-X 37E4
Mounting information

Working position (Z)

MH-C	3.85mm
MH-C redundant	4.35mm
MH-C2	3.85mm
MH-C2 redundant	4.35mm

Max. permitted misalignment of the magnetic actuator

dx	±0.25mm
dy	±0.25mm
dz	±0.5mm

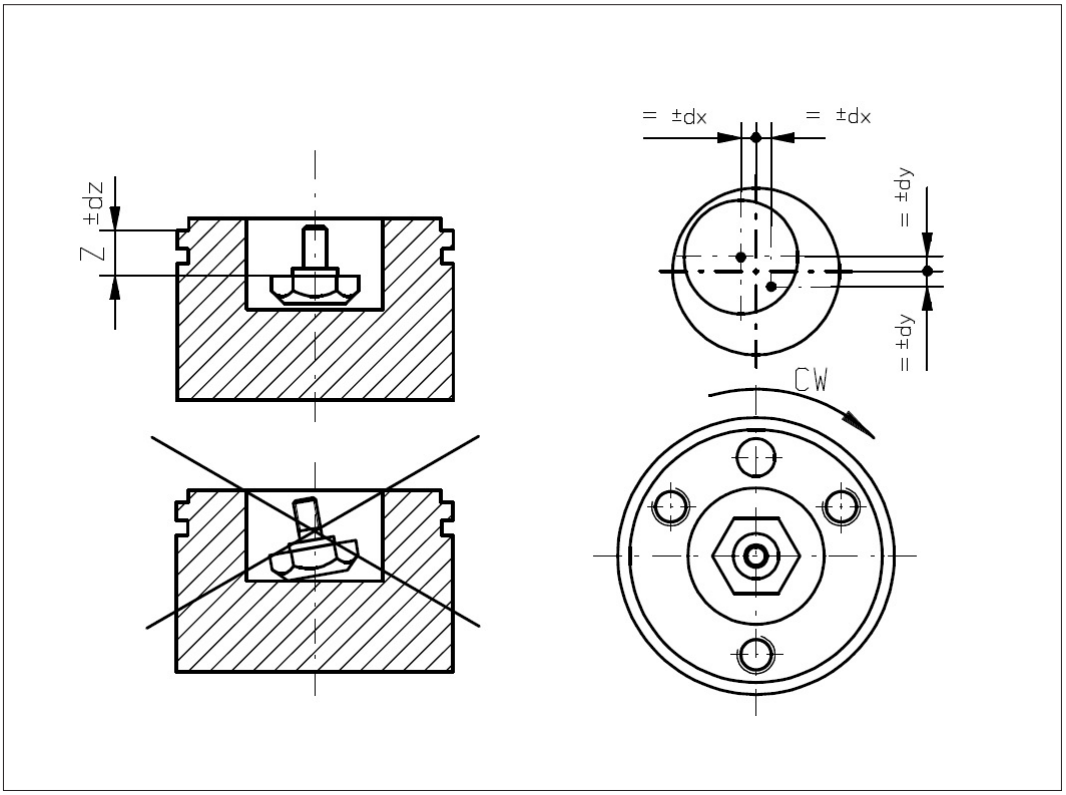

Vert-X 37E1
Mounting information

Working position (Z)

MH-C	4.95mm
MH-C redundant	5.45mm
MH-C2	4.95mm
MH-C2 redundant	5.45mm

Max. permitted misalignment of the magnetic actuator

dx	±0.25mm
dy	±0.25mm
dz	±0.5mm

Errors and omissions excepted. Subject to change without notice. / State: 27.02.19

Contelec AG
Portstrasse 38
CH-2503 Biel/Bienne
Phone +41 (0)32 3665600
Telefax +41 (0)32 3665604
sales@contelec.ch

CONTELEC
A company of the Siedle-Group

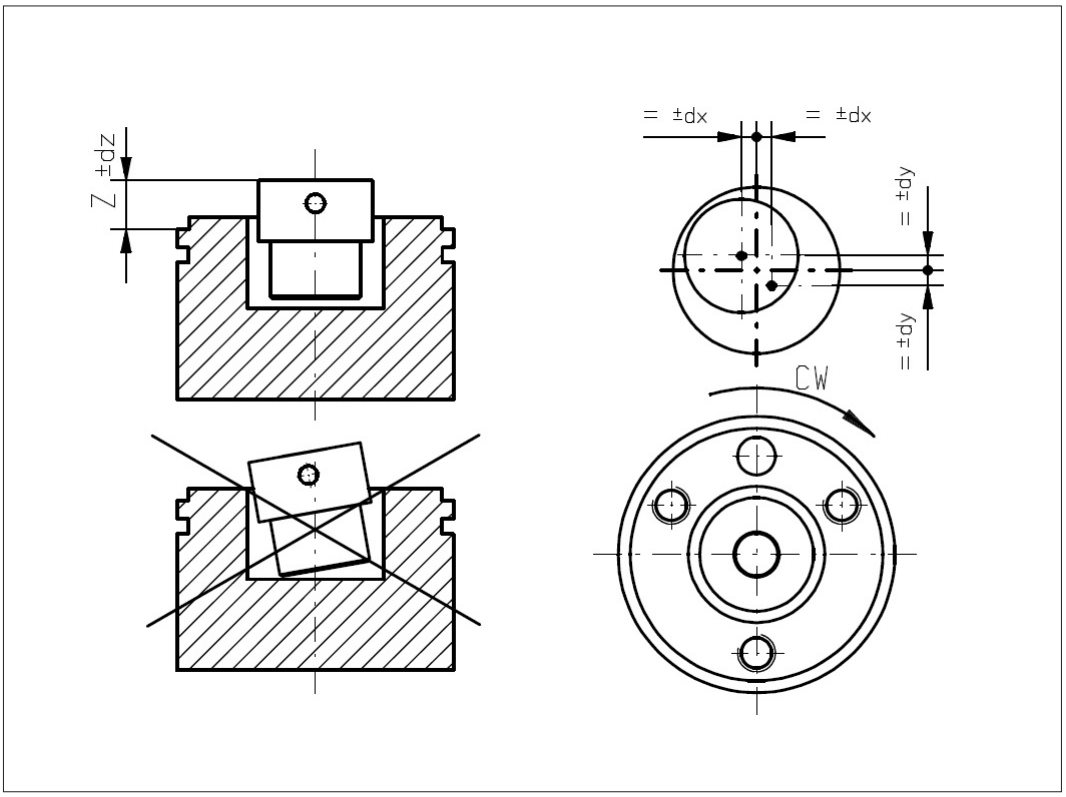

Vert-X 37E2
Mounting information

Working position (Z)

MH-C	6.45mm
MH-C redundant	5.95mm
MH-C2	6.45mm
MH-C2 redundant	5.95mm

Max. permitted misalignment of the magnetic actuator

dx	±0.25mm
dy	±0.25mm
dz	±0.5mm

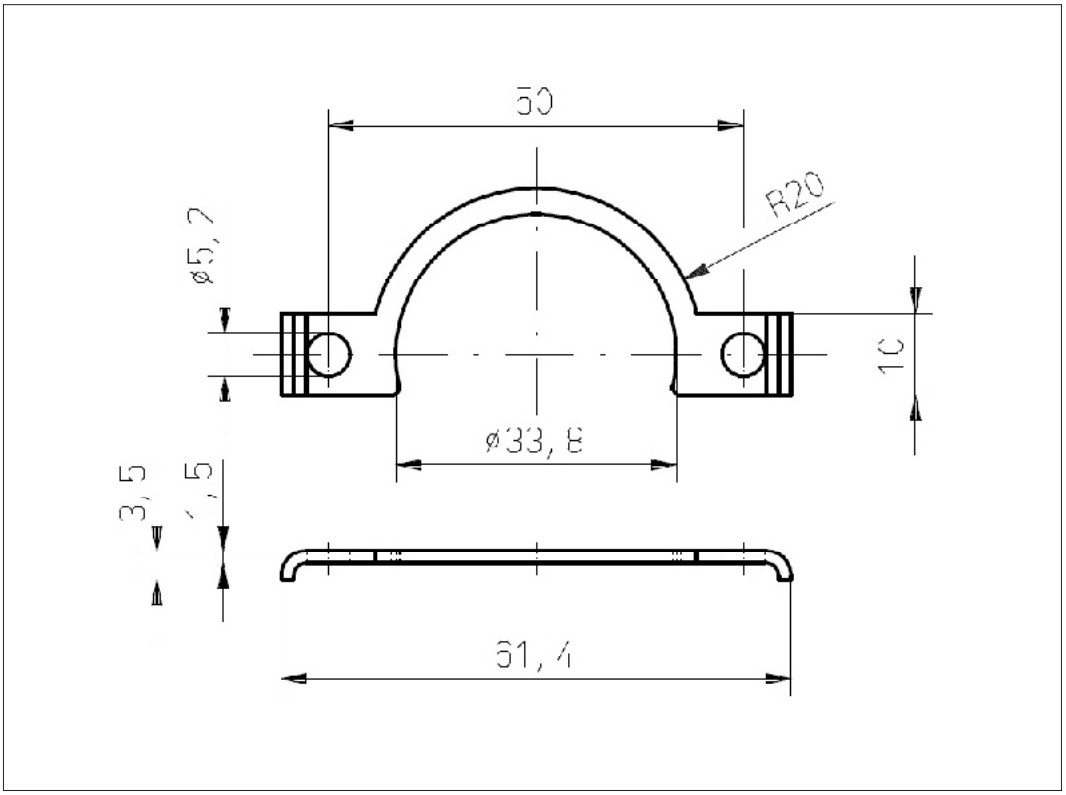

Vert-X 37E
Accessoires
Fixation clip

Errors and omissions excepted. Subject to change without notice. / State: 27.02.19

Contelec AG
Portstrasse 38
CH-2503 Biel/Bienne
Phone +41 (0)32 3665600
Telefax +41 (0)32 3665604
sales@contelec.ch

CONTELEC
A company of the Siedle-Group